# postura +

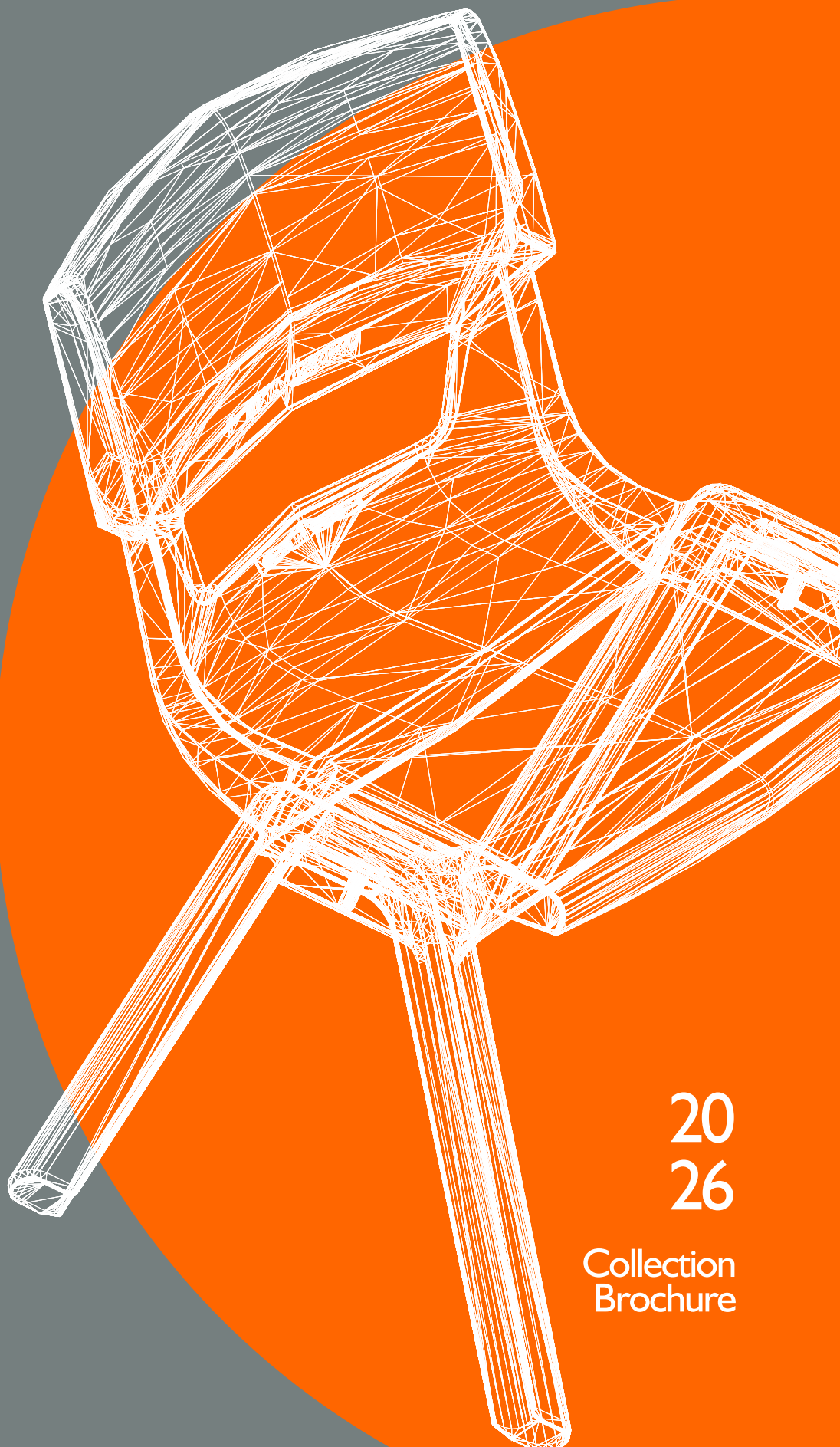

2026

Collection Brochure

postura +

# CONTENTS


| | |
|---|---|
| The Most Trusted Name In Education | 1 |
| The All-round Performer | 3 |
| Leading The Way | 5 |
| Seating Collection | 8 |
| One Piece Collection | 12 |
| One Piece Chair | 14 |
| Chair Size Guide | 15 |
| One Piece Stool | 18 |
| Mixed Material Collection | 22 |
| Colour Collection | 31 |
| Upholstery Options | 43 |
| Specifications | 45 |
| Perfect Fit | 54 |
| Environmental Overview | 57 |
| Additional Information | 59 |


Made in the UK

# The Most Trust-ed Name In Edu-cation

Postura+ is durable, low maintenance, and comfortable and designed for education environments. Created in Australia in the 1990s, it quickly gained popularity in the UK and has since been locally manufactured to meet growing demand and European standards.

The Postura+ collection helps create high performing learning spaces that support students' full potential with its versatile and specialist seating products. Its ergonomic design enhances concentration and comfort, making it excellent value for money by reducing procurement, repair and installation costs. Postura+ is backed by several certifications and a 20 year warranty and is used by millions of students worldwide.

# The All-round Per-former

Furniture is crucial in creating optimal learning spaces. Classrooms that once catered to one teaching style are now evolving into problem-solving and collaborative environments.
The learning space must be flexible to adapt to the needs of teachers and students.

Postura+ is the ideal solution for any budget and space, providing comfort, durability and practicality. Its ergonomic design enhances concentration and wellbeing, while its high-quality materials make it durable and easy to move. Plus, it's 100% recyclable and suitable for occasional outdoor use.

# Leading The Way To A Sustainable Future

"Our customers across the UK and Europe want to reduce their environmental impact without compromising quality or incurring unrealistic costs. Postura+ is a fantastic step in the right direction and we're confident our customers will be enthusiastic about this great achievement."

Alison Mallett,
Director of Education Furniture

Postura+ one piece chairs are made with at least 30% recycled polypropylene with plans to increase this to 50%, and ultimately 80-100% in the future.

The Postura+ one piece stools are made from glass filled polypropylene, with a minimum 30% recycled polypropylene too.

Our recycled plastic comes from a UK-based supply chain of waste plastic from the food industry. Over 600 tonnes of this is used in the standard production process a year, the equivalent to 2 million food containers. The 30% recycled polypropylene chairs and stools have been rigorously tested and achieved the same certifications and standards as fully virgin plastic chairs with a 20-year warranty remaining in place.

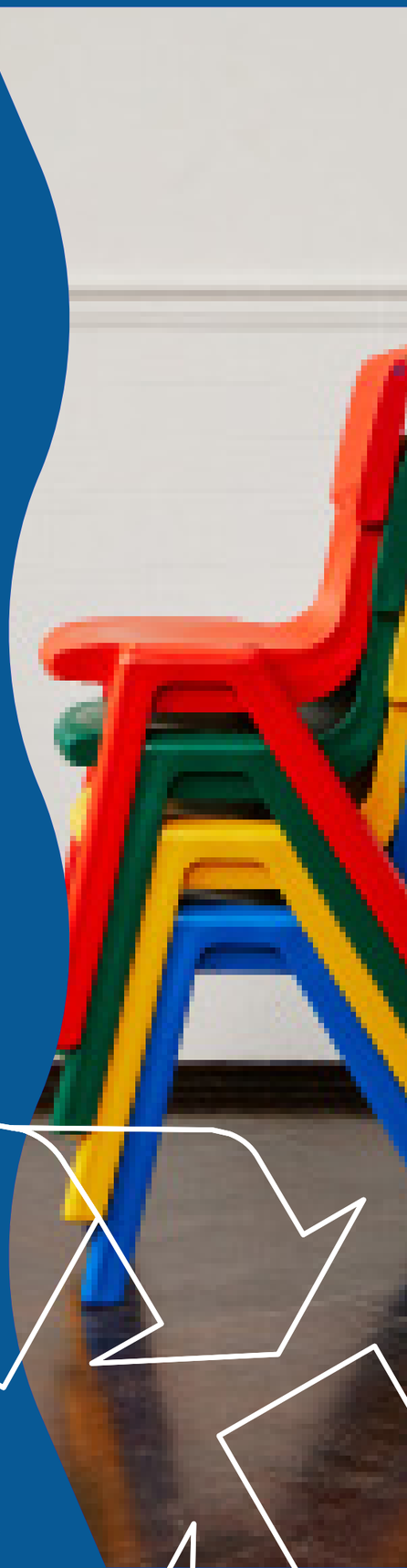

# Seating Collection

Optional chrome task base with castors or glides

Anti-static and anti-rocking for student safety

Non marking glides

Integrated grab handle

Link chairs available in size 5 & 6 for connected seating arrangements

Extra-large lower back ventilation

Waterfall seat edge

Glass fibre glides to protect floors & frame

Chairs stackable to 12 on floor or trolley
Trolley dimensions -
W: 580mm D: 350mm H: 1320mm

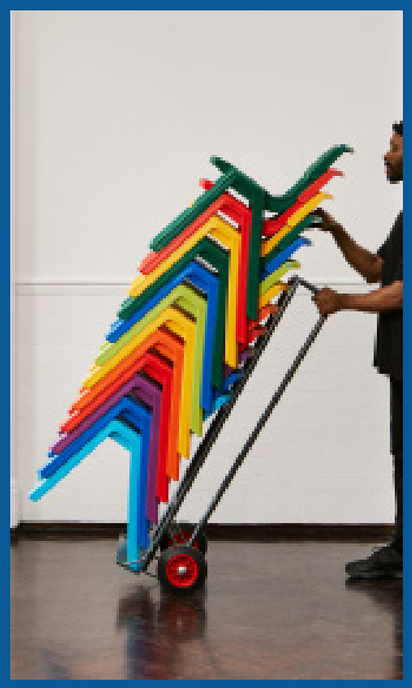

Flexible backrest

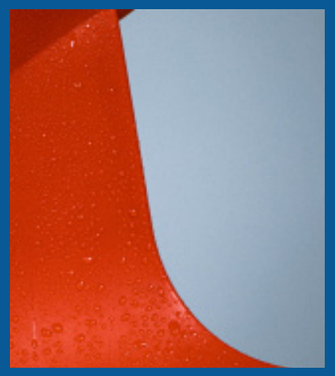

Built-in UV filter for outdoor use

Wide foot rail for comfort and accessibility

Powder coated steel tube legs

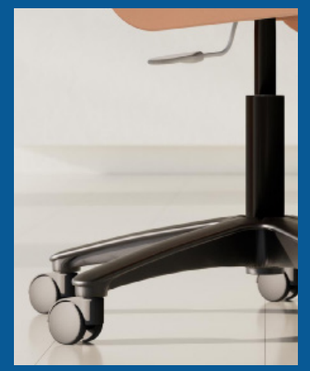

Black nylon task base with castors or glides

Polypropylene Shell

# One Piece Collection

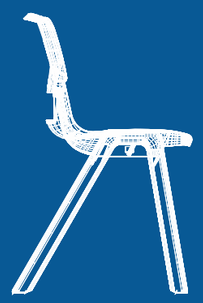

One Piece
Chair

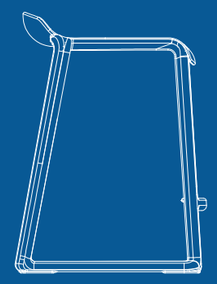

Low Back
Stool

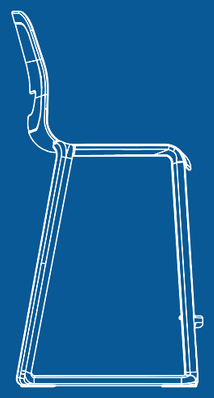

High Back
Stool

A one piece injection-moulded polypropylene chair, available in 6 sizes and stackable up to 12 high.

- Optional link clip (size 5 & 6)
- Optional transport trolley
- Upholstered seat option available (size 3-6)

# One Piece Chair

# Chair Sizing Guide

On Postura+ chairs you can find a colour-coded sticker on the top side of the backrest that corresponds to the table above. The example (below left) shows a blue sticker, so the chair can be identified as a Ash Grey size mark 6 chair.

| Size Mark | Colour Code | Seat Height | Seat Width | Seat Depth | Overall Height | Overall Width | Overall Depth | Weight (no seatpad) | Stack Height (12) |
|---|---|---|---|---|---|---|---|---|---|
| 1 | | 260mm | 280mm | 250mm | 500mm | 360mm | 330mm | 1.43kg | 1365mm |
| 2 | | 310mm | 280mm | 250mm | 550mm | 360mm | 365mm | 1.53kg | 1413mm |
| 3 | | 350mm | 340mm | 310mm | 645mm | 430mm | 420mm | 2.34kg | 1594mm |
| 4 | | 380mm | 340mm | 310mm | 675mm | 430mm | 440mm | 2.42kg | 1627mm |
| 5 | | 430mm | 380mm | 370mm | 760mm | 480mm | 505mm | 3.60kg | 1834mm |
| 6 | | 460mm | 380mm | 370mm | 790mm | 480mm | 525mm | 3.73kg | 1850mm |

NEW For 2025

# One Piece Stool

The Postura+ range has expanded to include One Piece Stools. With the same ergonomics and durability as our chairs, these low and high back stools are built for practical learning environments where comfort and safety is priority.

- Made from glass filled polypropylene and a minimum of 30% recycled polypropylene
- One piece injection-moulded meaning no loose parts
- Slim, sled base design
- Non-marking built in glides, suitable for non-slip floors
- Anti-static, stain resistant and easy to clean
- Wide foot rail for comfort and accessibility
- Stackable up to 6 high
- 20 colour options
- 20-year warranty

# High Back One Piece Stool

Featuring a curved backrest for better lumbar support and superior flexibility to maximise comfort, built-in window providing better ventilation and large footrest for long seated periods.

Certifications:
- BS EN 1729
- 3 heights available

# Low Back One Piece Stool

A backless stool option with a large footrest for long seated periods.

Certifications:
- BS EN 1729
- 3 heights available

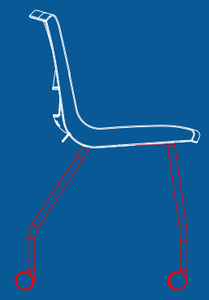

4 Leg
On Castors

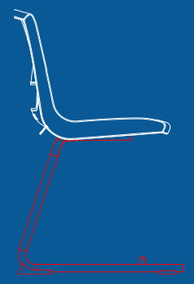

Reverse
Cantilever

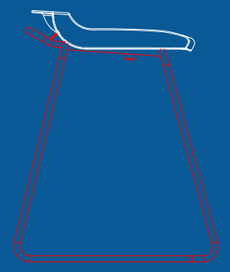

Low Back
Stool

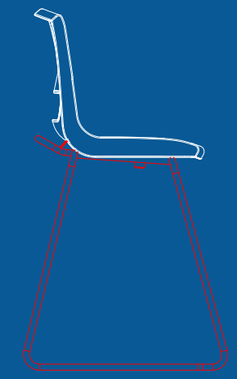

High Back
Stool

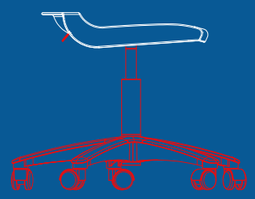

Low Back
Task Chair

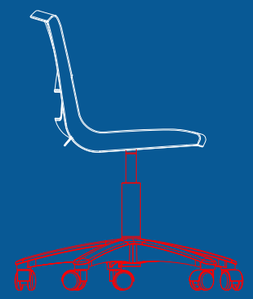

High Back
Task Chair

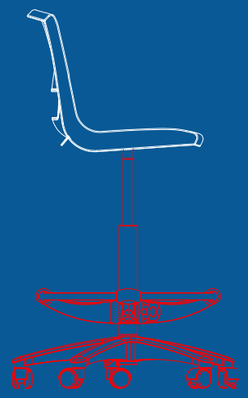

Task
Stool

Polypropylene Shell

Frame

# Mixed Material Collection

## 4 Leg On Castors

A mobile version of the classic 4 leg postura+ chair with 4 legs and castors for easy movement.

## Reverse Cantilever

The Reverse Cantilever Chair matches the industry leading comfort and durability of our iconic one piece chair, but in a sleek two piece design. Available in 2 sizes.

## Low Back Stool

A stool available with footrest for added comfort and nylon glides to protect floors and frames. Available in 3 sizes with an integrated bag hook/grab handle.

## High Back Stool

A high back stool available in 3 sizes which comes with nylon glides to protect floors and frames. The sled base design comes with an integrated bag hook/grab handle.

## Low Back Task Chair

A low back task chair with a height adjustable gas column for added flexibility.

## High Back Task Chair

A task chair with a height adjustable gas column for added flexibility.

# Task Stool

A task stool with height adjustable gas column for added flexibility and chrome footrest for comfort.

# Colour Collection

## Custom Colour

We offer customisation options for both polypropylene and metal frame colours, subject to minimum order quantities and additional surcharges.

To ensure accurate colour matching, we require Pantone or RAL references. Custom polypropylene colours require a minimum order quantity of 300 units per size and colour.

Colour Range →

Pantone 692C

Rose Blossom

Pantone 7536C

Light Sand

Muted

Pantone 5507C

Hazy Jade

Pantone 645C

Powder Blue

Pantone 518C

Purple Haze

Pantone 7531

Misty Brown

# Natural

Pantone 16-0220 TPX

Moss Green

Pantone 289C

Nordic Blue

Pantone 485

Poppy Red

Pantone 7548C

Sun Yellow

Chroma

Pantone 7728C

Forest Green

Pantone 2144C

Ink Blue

Pantone 513C

Grape Crush

Pantone 021C

Tangerine Fizz

Neon

Pantone 381C

Lime Zest

Pantone 638C

Aqua Blue

Achromatic

Pantone Black C

Jet Black

Pantone 4139C

Slate Grey

Pantone 10C

Iron Grey

Pantone 15-0000 TPX

Ash Grey

# Upholstery Options

| Band 1 | Band 2 | | Band 3 | | POA |
|---|---|---|---|---|---|
| Camira Fabrics | Camira Fabrics | Chieftan Fabrics | Camira Fabrics | | Camira Fabrics |
| Citadel | Advantage | Just Colour (vinyl) | 24/7+ | Landscape - Balance | Blazer Quilt Channel |
| Era | Canopy | | 24/7 Flax | Landscape - Contact | Blazer Quilt |
| Gravity | Chateau | | Acrobat | Landscape - Synergy | Hourglass |
| Phoenix | Figaro | | Aquarius | Silk | Nettle Collection |
| Revit | Halcyon - Linden | | Blazer | Stripes | Synergy Hourglass |
| | Honeycomb | | Century | Synergy | Synergy Quilt |
| | Mainline Flax | | Craggan | Touch FR | Channel |
| | Mainline Plus | | Craggan Flax | Track | Synergy Quilt |
| | Manhattan | | Halcyon - Aspen | Trail | Chevron |
| | Marvel | | Halcyon - Blossom | | Vintage |
| | Patina | | Halcyon - Cedar | | Zig Zag |
| | Sprint | | Halcyon - Poplar | | |
| | Urban | | Hebden | | |
| | Velocity | | Hemp | | |
| | Vita | | Hi-Tech | | |
| | X2 | | Intervene Plain | | |
| | Xtreme | | Intervene Texture | | |
| | Xtreme CS | | | | |



Please confirm with your KI Account Manager for the most up-to-date fabric options, including additional fabric brands.

Tamper proof fixing

NB: Seat pads are available on all Postura+ products except for One Piece Chairs in sizes 1 & 2.

Minimum order of four seat pads apply

# postura +

Shell

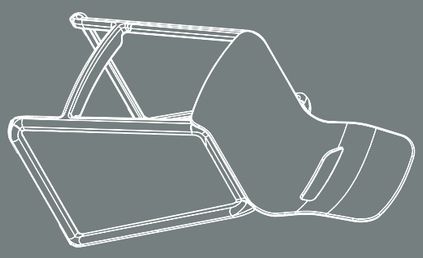

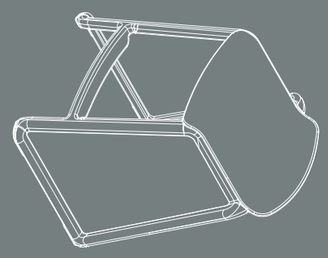

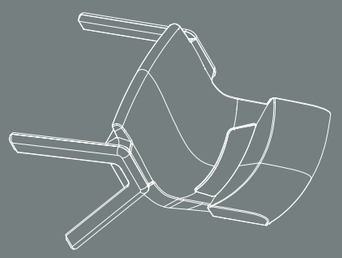

See Page 16 for Chair Sizing Guide

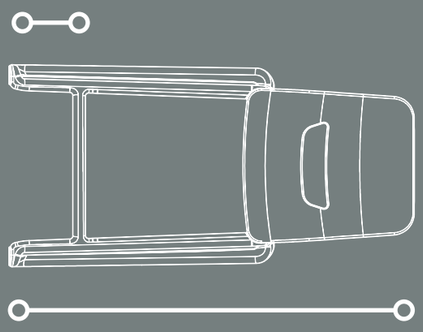

Foot Rail Height
380mm or 430mm or 460mm

Overall Width
482mm or 483mm or 485mm

Overall Height
920mm or 970mm or 1045mm

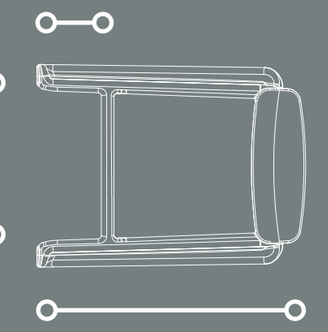

Foot Rail Height
380mm or 430mm or 460mm

Overall Width
482mm or 483mm or 485mm

Overall Height
639mm or 689mm or 764mm

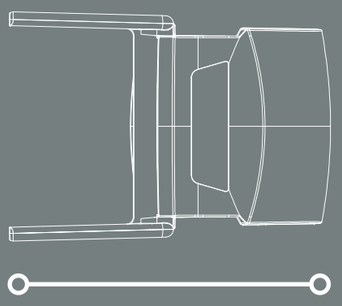

Overall Width
360mm - 480mm

Overall Height
500mm - 790mm

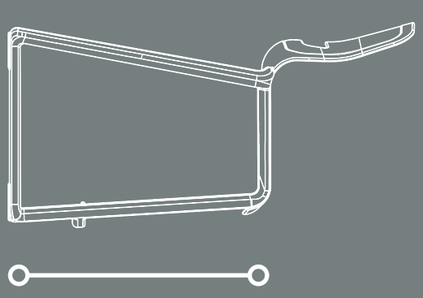

Overall Depth
370mm

Seat Height
560mm or 610mm or 685mm

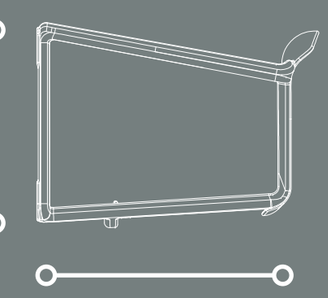

Overall Depth
370mm

Seat Height
560mm or 610mm or 685mm

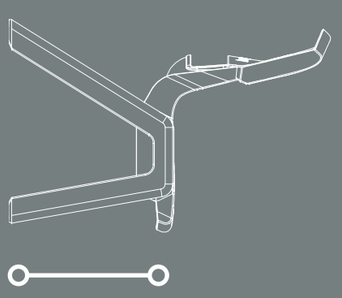

Overall Depth
330mm - 525mm

Seat Height
260mm - 460mm

## Specifications

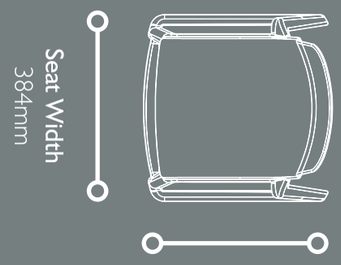

Seat Width
384mm

Seat Depth
380mm

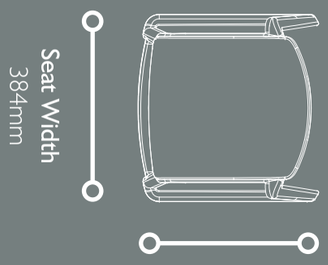

Seat Width
384mm

Seat Depth
380mm

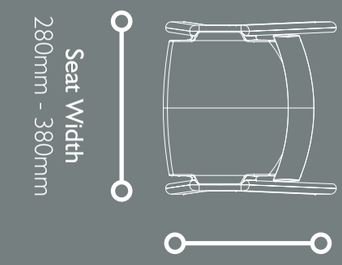

Seat Width
280mm - 380mm

Seat Depth
250mm - 370mm

Frame Shell

# postura +

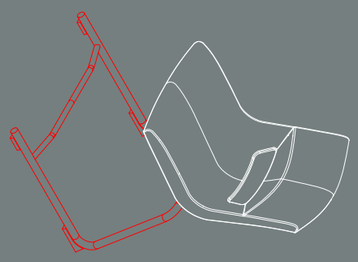

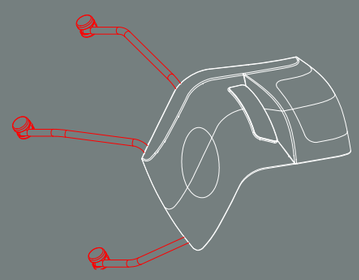

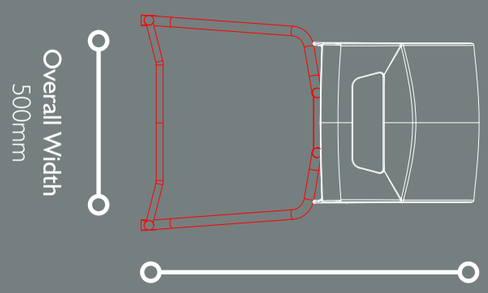


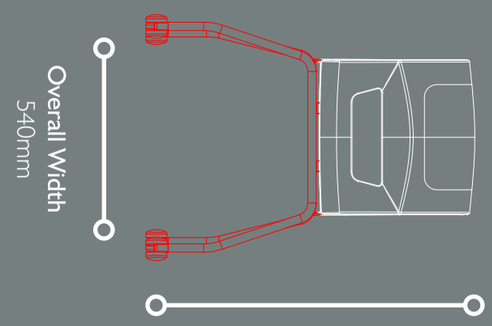


## Specifications

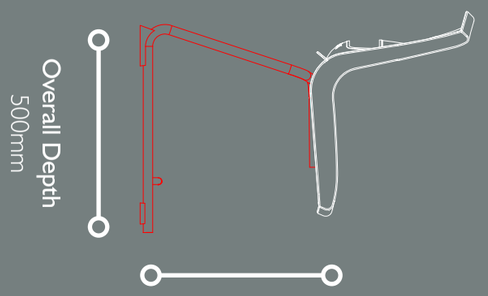


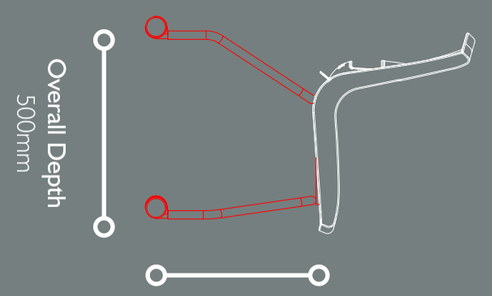


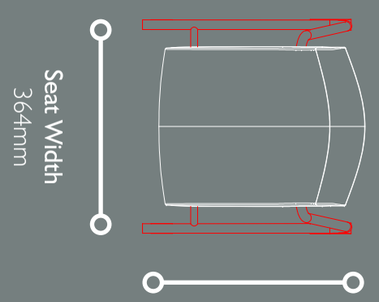


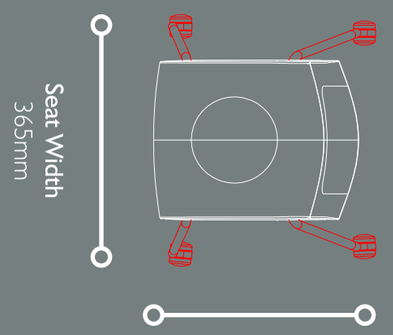

Frame Shell

# postura +

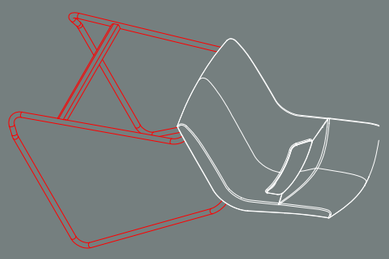

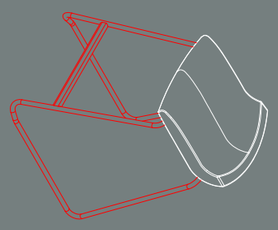

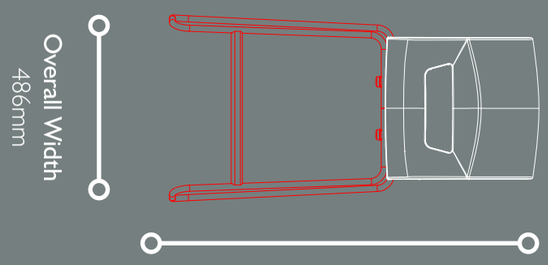


**Overall Height**
895mm or 945mm or 1020mm

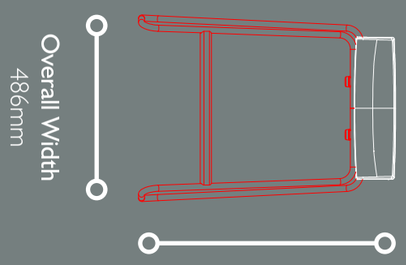


**Overall Height**
605mm or 655mm or 730mm

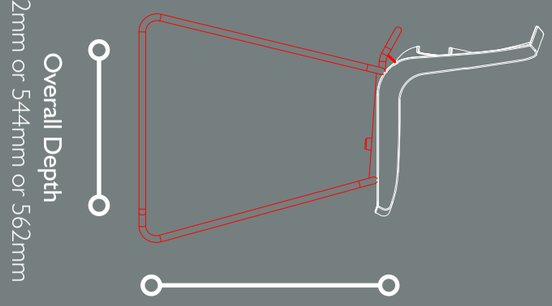


**Seat Height**
560mm or 610mm or 685mm

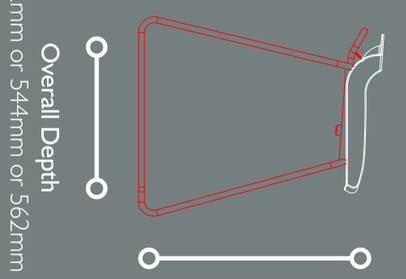


**Seat Height**
560mm or 610mm or 685mm

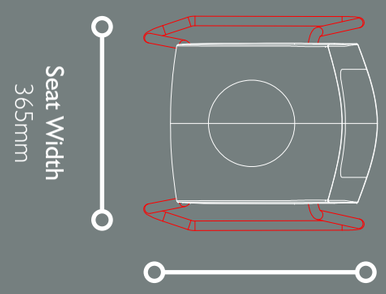


**Seat Depth**
370mm

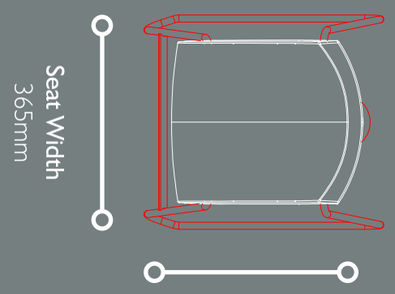


**Seat Depth**
370mm

# Specifications

Frame Shell

# postura +

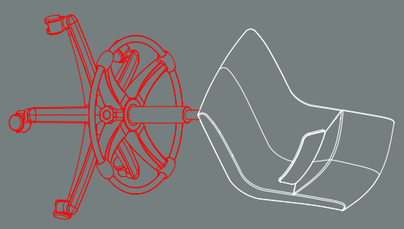

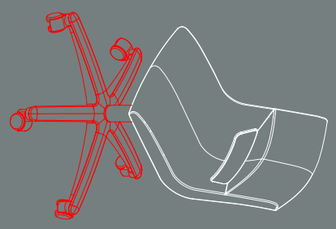

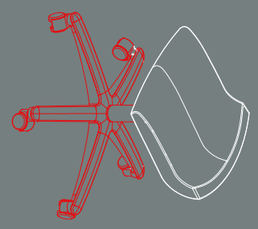

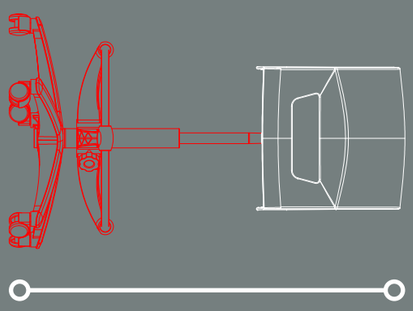


**Overall Height**
990-1150mm (glides)

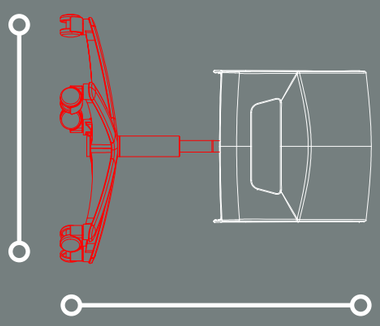


**Overall Height**
730-835mm (glides)
750-855mm (castors)

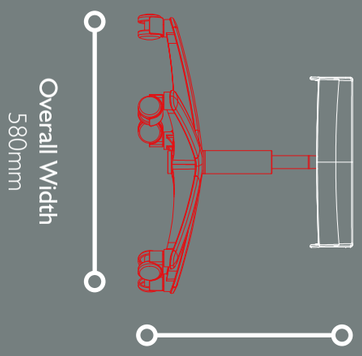


**Overall Height**
440-545mm (glides)
460-565mm (castors)

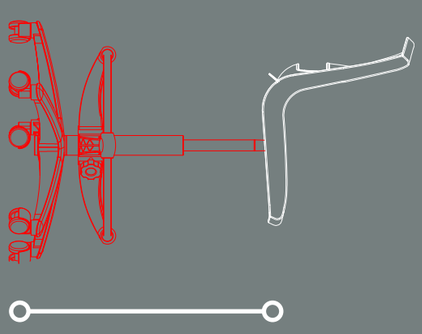


**Seat Height**
575-870mm (glides)

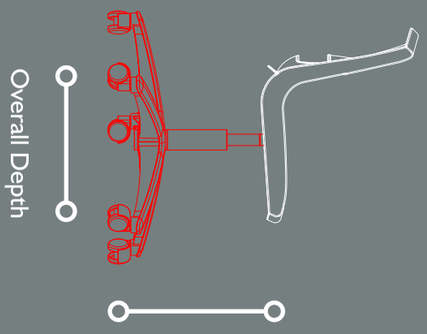


**Seat Height**
358-468mm (glides)
383-493mm (castors)

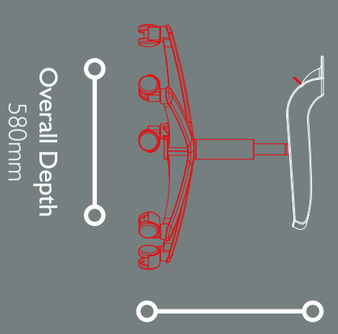


**Seat Height**
358-468mm (glides)
383-493mm (castors)

## Specifications

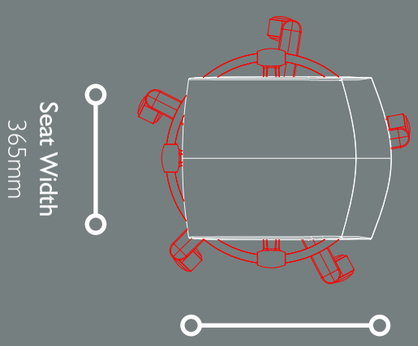


**Seat Depth**
370mm

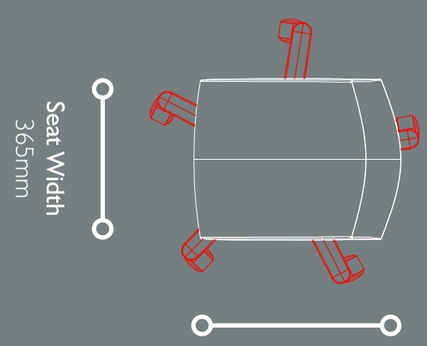


**Seat Depth**
370mm

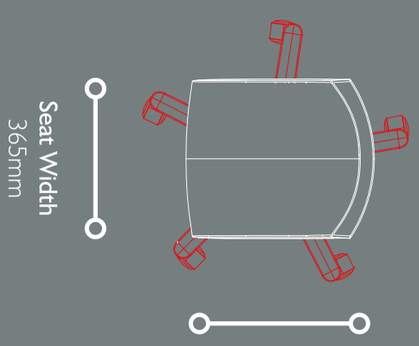


**Seat Depth**
370mm

# EN1

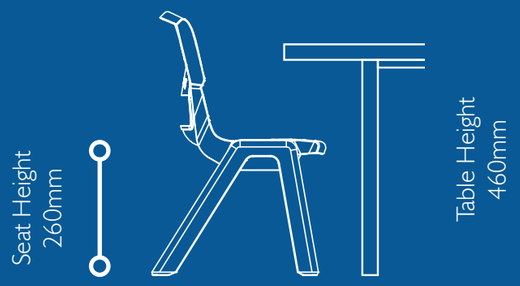


**Popliteal Height Range**
250-280mm
**Stature Range**
930-1150mm
**Age Range**
3-4

# EN2

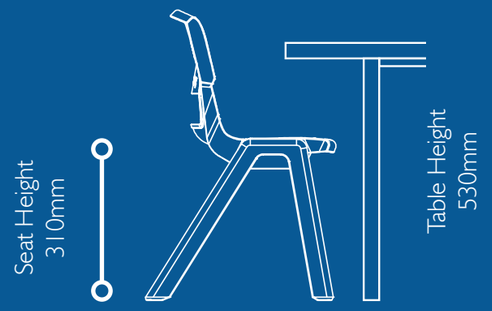


**Popliteal Height Range**
280-315mm
**Stature Range**
1080-1210mm
**Age Range**
4-6

# EN3

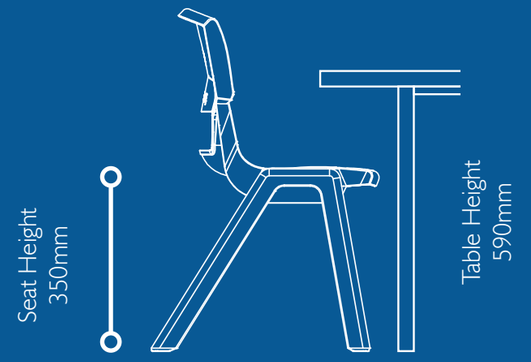


**Popliteal Height Range**
315-355mm
**Stature Range**
1190-1420mm
**Age Range**
6-8

In January 2007, British and European Standards were established for educational institutions.' BS EN 1729 Part 1 ensures that furniture meets appropriate size, shape, and ergonomic design to promote good posture and reduce RSI and back pain in students. This guide includes size marks for fixed seat and table heights suitable for students of different ages.

The correct seat height is determined by measuring the popliteal height, which is the distance from the floor to the back of the knee when seated with thighs horizontal and lower leg vertical with feet flat on the floor. This measurement is useful in determining the compatible size for existing or older furniture that does not comply with BS EN 1729. Stature is measured from the floor to the top of the head.

It's crucial that table size marks align with chair and stool size marks. EN chairs should ideally match EN tables, ensuring a harmonious and ergonomic environment for students.

# EN4

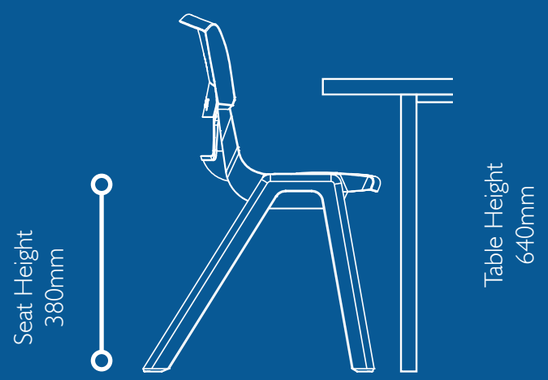


**Popliteal Height Range**
355-405mm
**Stature Range**
1330-1590mm
**Age Range**
8-11

# EN5

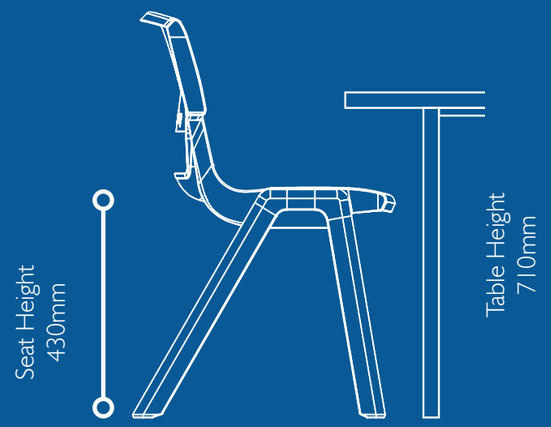


**Popliteal Height Range**
405-435mm
**Stature Range**
1460-1765mm
**Age Range**
11-14

# EN6

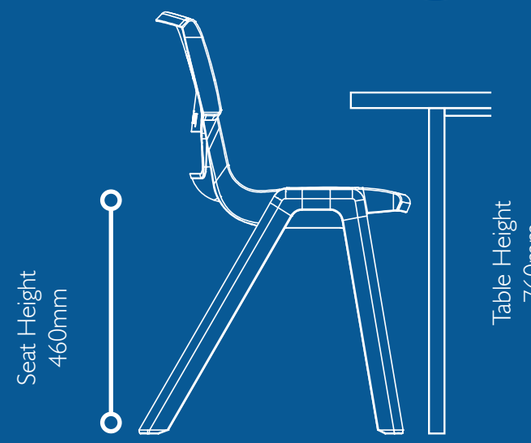


**Popliteal Height Range**
435-485mm
**Stature Range**
1590-1880mm
**Age Range**
14-Adults

# Per-fect Fit

# EN4

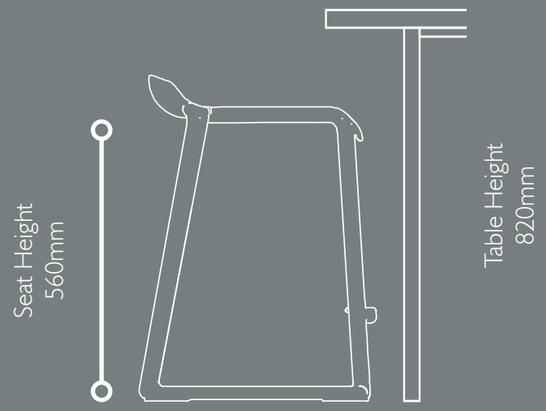


**Foot Rail Height**
380mm
**Popliteal Height Range**
355-405mm
**Stature Range**
1330-1590mm
**Age Range**
8-11

# EN5

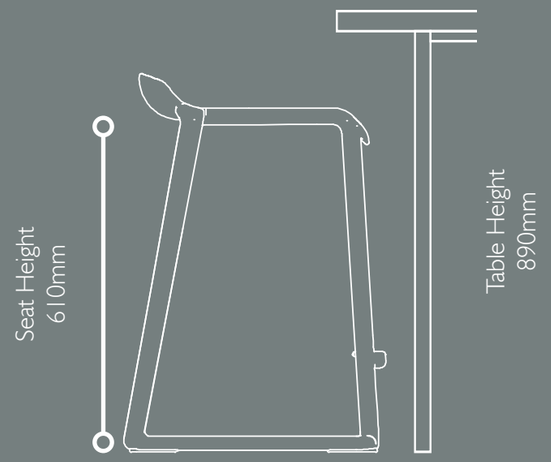


**Foot Rail Height**
430mm
**Popliteal Height Range**
405-435mm
**Stature Range**
1460-1765mm
**Age Range**
11-14

# EN6

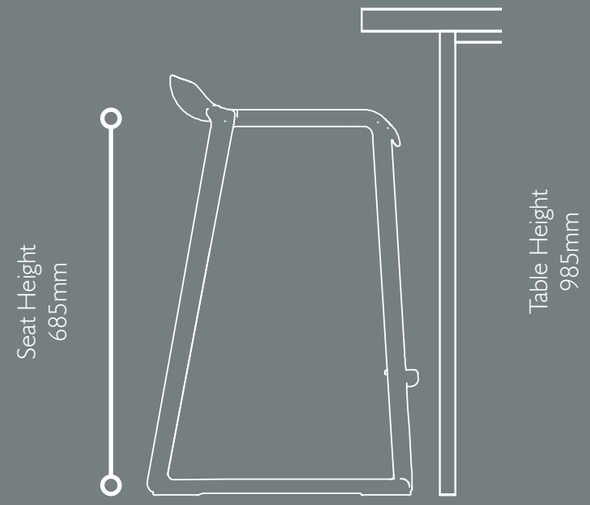


**Foot Rail Height**
460mm
**Popliteal Height Range**
435-485mm
**Stature Range**
1590-1880mm
**Age Range**
14-Adults

# Environmental Overview

**Environmental Product Declaration**

Download the cradle-to-grave Environmental Product Declaration (EPD) for KI's Postura chair Size 6. The EPD is based on production information and date collected by KI in 2020. It was modelled using SImaPro 9.0.0.24 and data from Ecoinvent version 3.5.

**Materials Information**

Polypropylene chairs & Shells:

- Jet Black one piece chairs and Postura+ family Shells: 100% recycled polypropylene
- All other one piece chairs: 30% recycled polypropylene, 70% virgin polypropylene.
- All other Postura+ family Shells: 100% virgin polypropylene
- All one piece stools are made from glass filled polypropylene, with a minimum 30% recycled polypropylene
- All Postura+ chairs & shells are 100 recyclable

Frames & bases:

- Powder coated steel frames: 100% recyclable
- Glides: 100% nylon, 100% recyclable
- Task base (nylon & chrome; gas columns, castors & glides):
- Nylon task base: 100% recycled Glass Filled Nylon.
- Nylon and Chrome task base:100% recyclable (made of mixed materials, may need to be separated for recycling; gas lifts must be depressurised and drained of oil)
- Seat pads: 4mm foam fixed with adhesive onto plywood shell, fabric secured by C-Gex with bias banding.

# Additional Information

**KI (UK) Ltd Rights & Warranties**

Polypropylene chairs & seats shells: 20-year warranty.
Metal frames, task bases & gas columns: 5-year warranty.

High wear parts such as fabrics, other covering material/finishes, foam, castors, glides and gas lifts: 1-year warranty.

For detailed information, please visit our website: https://www.kieurope.com/customer-service/legal-privacy/warranties

**Certifications & Standards**

- Indoor Advantage Gold™ – Furniture: All Postura+ products have been independently assessed by SCS Global Services and certifies for low volatile organic compound (VOC) emissions. This certification aligns with ANSI/BIRMA m7.1, X7.1 and CA01350. It contributes to LEED low emitting materials credits and WELL Credit 04 for VOC reduction.
- BS EN 1729: Sizing & dimensions – Chairs and tables for educational institutions. Postura+ one piece chairs are certified to this standard.
- BS EN 1729: Strength & stability – Chairs and tables for educational institutions. All Postura+ products are certified to this standard.
- BS EN 16139: Strength & stability – severe contract use.
- BS 5852 Ignition Source 0 & 1 Standard stocked Postura+ One Piece Chairs in all sizes (1-6) are certified to this standard.
- BS 5852 Ignition Source 0,1 & 5 Special order Postura+ One Piece Chairs with FR additive and MOQ requirements, in all sizes (1-6) are certified to this standard.

Suitable for projects aiming to achieve SKA, BREEAM, WELL, LEED v4 and more.

**User Weight Loading**

Postura+ One Piece chairs & stools weight limits by size:
Size 1: 130kg
Size 2 & 3: 160kg
Size 4, 5 & 6: 200kg

**Design Resources**

For image libraries , certificates, CAD/Revit models and more resources, please visit kieurope.com/postura

**Care & Maintenance Instructions**

Maintaining the appearance and finish of your product is best achieved through proper care and cautious use.

**Polypropylene shells:**

For regular cleaning of Shells use a soft cloth with mild soap or detergent and lukewarm water. Avoid solvents, citrus/orange-based cleaners or heavy-duty kitchen cleaners. Stubborn spots like chewing gum can be removed using cigarette lighter fluid. Wipe dry immediately. To restore lustre to smooth surfaces and perform light cleaning, a general non-abrasive all-purpose cleaner is recommended. Its anti-static properties help repel dust and dirt. High quality wax can be used to restore lustre and provide protective coating.

**Powder coated & chrome metal frames:**

Remove chewing gum and stubborn spots with lighter fluid, wipe dry immediately. It is advisable to protect frames from water, rain, ice, snow and salt exposure.
For gloss finish: use a silicon based spray polish for cleaning.
Thin surface scratches can be addressed by wiping with thinners (apply onto a soft cloth, not directly on the surface) or spraying with clear lacquer.
Deep scratches should be sanded with emery paper, cleaned and repainted using appropriate spray gloss/matte paint.
Note: colour matching is crucial. Spray onto white photocopy paper and check the colour before applying.

**Vinyl Fabric**:

For cleaning, use normal dishwashing liquid with warm water and a soft cloth. Dry the fabric with a clean, soft cloth.

**Polyester & Wool Fabric**:

For wet stains use dry carpet pellets or powder. Apply them to the stain, allow them to dry and then brush off or vacuum.
For dry stains use standard upholstery cleaner foam. Lightly spray the foam over the stain, let it sit for 5 minutes and then brush it off.

## Packaging & Shipping

Wooden pallets: reusable and recyclable
Shrink wrap: recyclable & made from 30% recycled plastic
Banding: recyclable

| Product | Units per box | Units per pallet | Pallet weight* | Pallet dimensions* (mm, L x W x H) |
|---|---|---|---|---|
| One Piece Chair Size 1 | 6 | 120 | 188.0kg | 1000 x 1200 x 2170 |
| One Piece Chair Size 2 | 6 | 120 | 202.0kg | 1000 x 1200 x 2170 |
| One Piece Chair Size 3 | 4 | 68 | 178.0kg | 1000 x 1200 x 2280 |
| One Piece Chair Size 4 | 4 | 68 | 180.0kg | 1000 x 1200 x 2280 |
| One Piece Chair Size 5 | 3 | 56 | 220.5kg | 1000 x 1200 x 2190 |
| One Piece Chair Size 6 | 3 | 56 | 232.5kg | 1000 x 1200 x 2190 |
| One Piece Stool Low Back 560mm | 1 | 16 | 101kg | 1000 x 1200 x 1060 |
| One Piece Stool Low Back 610mm | 1 | 16 | 104kg | 1000 x 1200 x 1110 |
| One Piece Stool Low Back 685mm | 1 | 16 | 126kg | 1000 x 1200 x 1190 |
| One Piece Stool High Back 560mm | 1 | 16 | 113kg | 1000 x 1200 x 1340 |
| One Piece Stool High Back 610mm | 1 | 16 | 116kg | 1000 x 1200 x 1390 |
| One Piece Stool High Back 685mm | 1 | 16 | 137kg | 1000 x 1200 x 1465 |
| High Back Stool | 1 | 16 | 115.0kg | 1000 x 1200 x 2000 |
| Low Back Stool | 1 | 20 | 131.0kg | 1000 x 1200 x 2000 |
| Low Back Task Chair | 1 | 16 | 123kg | 1000 x 1200 x 2000 |
| Task Stool | 1 | 8 | 62kg | 1000 x 1200 x 1100 |
| High Back Task Chair | 1 | 16 | 123kg | 1000 x 1200 x 2000 |
| Reverse Cantilever | 1 | 16 | 108kg | 1000 x 1200 x 2000 |
| 4 Leg on Castors | 1 | 16 | 137kg | 1000 x 1200 x 2000 |

** All Weights and dimensions are approximate.*

## Weights

| Product | Product Weight | Weight with Seat Pad | Max User Weight |
|---|---|---|---|
| One Piece Size 1 | 1.43kg | - | 132kg |
| One Piece Size 2 | 1.53kg | - | 163kg |
| One Piece Size 3 | 2.34kg | 3.34kg | 163kg |
| One Piece Size 4 | 2.42kg | 3.42kg | 204kg |
| One Piece Size 5 | 3.6kg | 4.6kg | 204kg |
| One Piece Size 6 | 3.73kg | 4.73kg | 204kg |
| One Piece Stool Low Back 560mm | 4.4kg | N/A | 204kg |
| One Piece Stool Low Back 610mm | 4.6kg | N/A | 204kg |
| One Piece Stool Low Back 685mm | 4.8kg | N/A | 204kg |
| One Piece Stool High Back 560mm | 5.3kg | N/A | 204kg |
| One Piece Stool High Back 610mm | 5.6kg | N/A | 204kg |
| One Piece Stool High Back 685mm | 5.9kg | N/A | 204kg |
| Reverse Cantilever | 4.4kg | 5.4kg | 204kg |
| 4 Leg on Castors | 4.25kg | 5.25kg | 204kg |
| Low Back Stool 560mm | 4.7kg | 5.7kg | 204kg |
| Low Back Stool 610mm | 5.1kg | 6.1kg | 204kg |
| Low Back Stool 685mm | 5.5kg | 6.5kg | 204kg |
| High Back Stool 560mm | 5.1kg | 6.1kg | 204kg |
| High Back Stool 610mm | 5.5kg | 6.5kg | 204kg |
| High Back Stool 685mm | 5.9kg | 6.9kg | 204kg |
| High Back Task Chair with castors & nylon base | 6.0kg | 7.0kg | 204kg |
| High Back Task Chair with glides & nylon base | 6.0kg | 7.0kg | 204kg |
| High Back Task Chair with castors & chrome base | 7.1kg | 8.1kg | 204kg |
| High Back Task Chair with glides & chrome base | 7.1kg | 8.1kg | 204kg |
| High Task Chair with castors & nylon base | 9.4kg | 10.4kg | 204kg |
| High Task Chair with glides & nylon base | 9.4kg | 10.4kg | 204kg |
| High Task Chair with castors & chrome base | 10.5kg | 11.5kg | 204kg |
| High Task Chair with glides & chrome base | 10.5kg | 11.5kg | 204kg |
| Low Back Task Chair with castors & nylon base | 5.5kg | 6.5kg | 204kg |
| Low Back Task Chair with glides & nylon base | 5.5kg | 6.5kg | 204kg |
| Low Back Task Chair with castors & chrome base | 6.6kg | 7.6kg | 204kg |
| Low Back Task Chair with glides & chrome base | 6.6kg | 7.6kg | 204kg |

**KI (UK) Ltd**
91 Goswell Road,
London,
United Kingdom,
EC1V 7EX

kieurope.com
020 7404 7441
info@kieurope.com